Industrial RC Tornado Monitor

INSTRUCTION FOR SAFE INSTALLATION, OPERATION, AND MAINTENANCE

⚠ DANGER

Understand manual before use. Operation of this device without understanding the manual and receiving proper training is a misuse of this equipment. Obtain safety information at tft.com/serial-number

This equipment is intended for use by trained and qualified personnel. All personnel using this equipment shall have completed training approved by the Authority Having Jurisdiction (AHJ).

This instruction manual is intended to familiarize operators and maintenance personnel with the installation, operation, servicing, and safety procedures associated with this product. This manual should be kept available to all operating and maintenance personnel.

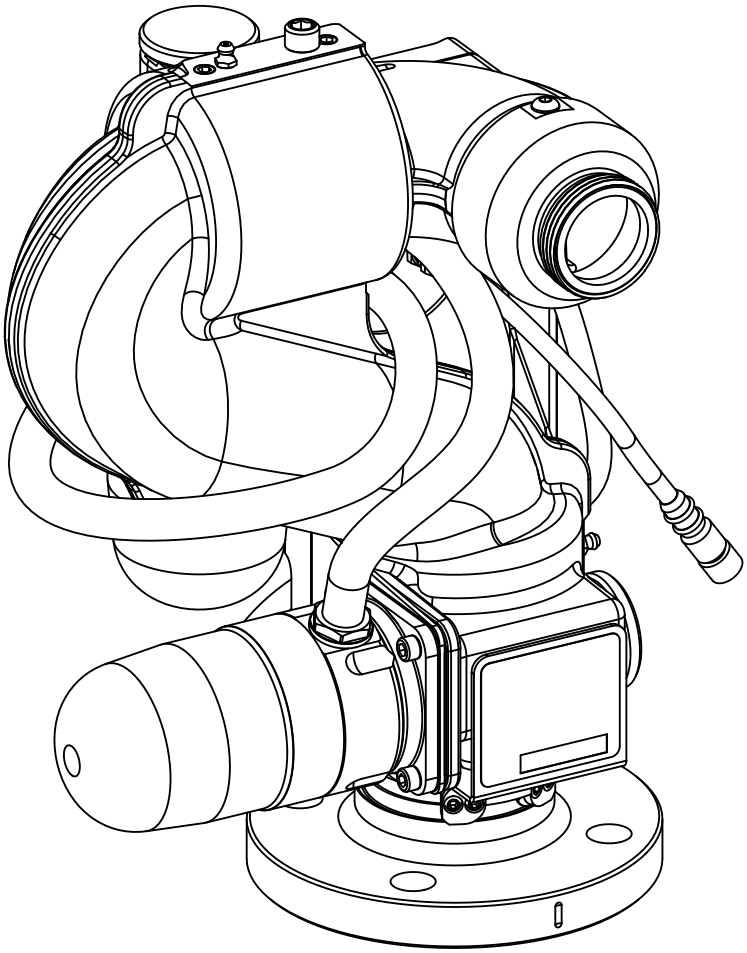

TASK FORCE TIPS LLC

MADE IN USA · tft.com

3701 Innovation Way, Valparaiso, IN 46383-9327 USA

800-348-2686 · 219-462-6161 · Fax 219-464-7155

©Copyright Task Force Tips LLC 2004-2026

DANGER

PERSONAL RESPONSIBILITY CODE

The member companies of FEMSA that provide emergency response equipment and services want responders to know and understand the following:

1. **Firefighting and Emergency Response are inherently dangerous activities requiring proper training in their hazards and the use of extreme caution at all times.**
2. **IT IS YOUR RESPONSIBILITY to read and understand any user's instructions, including purpose and limitations, provided with any piece of equipment you may be called on to use.**
3. **IT IS YOUR RESPONSIBILITY to know that you have been properly trained in Firefighting and/or Emergency Response and in the use, precautions, and care of any equipment you may be called upon to use.**
4. **IT IS YOUR RESPONSIBILITY to be in proper physical condition and to maintain the personal skill level required to operate any equipment you may be called upon to use.**
5. **IT IS YOUR RESPONSIBILITY to know that your equipment is in operable condition and has been maintained in accordance with the manufacturer's instructions.**
6. **Failure to follow these guidelines may result in death, burns or other severe injury.**

Fire and Emergency Manufacturers and Service Association, Inc.
PO Box 147, Lynnfield, MA 01940 • www.FEMSA.org

FEMSA

© 2020 FEMSA. All Rights Reserved.

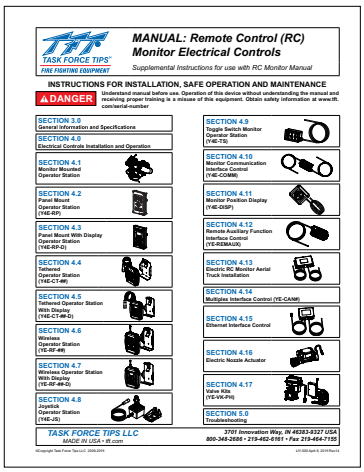

TASK FORCE TIPS
FIRE FIGHTING EQUIPMENT

MANUAL: Remote Control (RC) Monitor Electrical Controls

Supplemental Instructions for use with RC Monitor Manual

INSTRUCTIONS FOR INSTALLATION, SAFE OPERATION AND MAINTENANCE

DANGER Understand manual before use. Operation of this device without understanding the manual and receiving proper training is a misuse of this equipment. Obtain safety information at www.tft.com/serial-number

SECTION 3.0 General Information and Specifications
SECTION 4.0 Electrical Controls Installation and Operation
SECTION 4.1 Monitor Mounted Operator Station
SECTION 4.2 Panel Mount Operator Station (YIE-RP)
SECTION 4.3 Panel Mount With Display Operator Station (YIE-RP-D)
SECTION 4.4 Tethered Operator Station (YIE-CT-W)
SECTION 4.5 Tethered Operator Station With Display (YIE-CT-W-D)
SECTION 4.6 Wireless Operator Station (YIE-RF-W)
SECTION 4.7 Wireless Operator Station With Display (YIE-RF-W-D)
SECTION 4.8 Joystick Operator Station (YIE-JS)
SECTION 4.9 Toggle Switch Monitor Operator Station (YIE-TS)
SECTION 4.10 Monitor Communication Interface Control (YIE-COMM)
SECTION 4.11 Monitor Position Display (YIE-DISP)
SECTION 4.12 Remote Auxiliary Function Interface Control (YIE-RDMAUX)
SECTION 4.13 Electric RC Monitor Aerial Truck Installation
SECTION 4.14 Multiplex Interface Control (YIE-CANR)
SECTION 4.15 Ethernet Interface Control
SECTION 4.16 Electric Nozzle Actuator
SECTION 4.17 Valve Kits (YIE-VK-PH)
SECTION 5.0 Troubleshooting

TASK FORCE TIPS LLC
MADE IN USA • tft.com
3701 Innovation Way, IN 46383-9327 USA
800-348-2686 • 219-462-6161 • Fax 219-464-7155

©Copyright Task Force Tips LLC 2004-2026
LIY-500 Rev02 March 2, 2018 Rev 1

This manual is intended for use with
LIY-500 Remote Control (RC)
Monitor Electrical Controls

TABLE OF CONTENTS

1.0 MEANING OF SAFETY SIGNAL WORDS

2.0 SAFETY

3.0 GENERAL INFORMATION
- 3.1 VARIOUS TERMS AND MODELS
- 3.2 SPECIFICATIONS
  - 3.2.1 MECHANICAL
  - 3.2.2 ELECTRICAL
  - 3.2.3 SAFE OPERATING ENVELOPE
- 3.3 USE WITH SALT WATER
- 3.4 OVERALL DIMENSIONS AND TRAVEL RANGES

4.0 INSTALLATION
- 4.1 STRUCTURAL REQUIREMENTS
- 4.2 TRAVEL STOPS
- 4.3 NOZZLE INSTALLATION
- 4.4 PRESSURE GAUGE PORT
- 4.5 DRAINING RESIDUAL WATER

5.0 OPERATING INSTRUCTIONS

6.0 RECOMMENDED PARK POSITION
- 6.1 OVERRIDE HEX DRIVE

7.0 FLOW CHARACTERISTICS
- 7.1 STACKED TIPS FLOW
- 7.2 TORNADO MONITOR AND STREAM STRAIGHTENER FRICTION LOSS
  - 7.2.1 STREAM STRAIGHTENERS WITH STACKED TIPS
  - 7.2.2 STREAM STRAIGHTENERS WITH FOG NOZZLES

8.0 WARRANTY

9.0 MAINTENANCE
- 9.1 REQUIRED MAINTENANCE
- 9.2 TROUBLE SHOOTING
- 9.3 REPAIR

10.0 EXPLODED VIEWS AND PARTS LISTS

11.0 OPERATION AND INSPECTION CHECKLIST

1.0 MEANING OF SAFETY SIGNAL WORDS

A safety related message is identified by a safety alert symbol and a signal word to indicate the level of risk involved with a particular hazard. Per ANSI Z535.6, the definitions of the four signal words are as follows:

⚠ DANGER — **DANGER indicates a hazardous situation which, if not avoided, will result in death or serious injury.**

⚠ WARNING — **WARNING indicates a hazardous situation which, if not avoided, could result in death or serious injury.**

⚠ CAUTION — **CAUTION indicates a potentially hazardous situation which, if not avoided, could result in minor or moderate injury.**

NOTICE — **NOTICE is used to address practices not related to physical injury.**

2.0 SAFETY

⚠ DANGER — **An inadequate supply of pressure and/or flow will cause an ineffective stream and can result in injury or death. Choose operating conditions to deliver adequate fire suppression. See flow graphs.**

⚠ WARNING — **The stream exiting a nozzle is very powerful and capable of causing injury and property damage. Make sure the nozzle is securely attached and pointing in a safe direction before water is turned on. Do not direct water stream to cause injury or damage to persons or property.**

⚠ WARNING — **Equipment may be damaged if frozen while containing significant amounts of water. Such damage may be difficult to detect visually. Subsequent pressurization can lead to injury or death. Any time the equipment is subject to possible damage due to freezing, it must be tested and approved for use by qualified personnel before being considered safe for use.**

⚠ WARNING — **This equipment is intended for use by trained personnel for firefighting. Use of this equipment for other purposes may involve hazards not addressed by this manual. Seek appropriate guidance and training to reduce risk of injury.**

⚠ CAUTION — **The electric drives are current limited but may still produce enough force to cause injury. To avoid injury from moving equipment:**

- **Be aware that equipment may be remotely operated**
- **Keep hands and fingers away from pinch points**
- **Never operate the manual override while electric controls are in operation**

NOTICE — **To prevent mechanical damage, do not drop or throw equipment.**

3.0 GENERAL INFORMATION

TFT's Tornado RC compact industrial monitor is designed for both fire and industrial applications. This industrial version is certified to ingress protection IP66/67 to limit penetration of dust and moisture into the electronics, ball races and gears. Models can be remotely operated and are capable of flowing up to 500 gpm (2000 l/min). Heavy duty seals and O-rings help mitigate contamination in applications like mining and road construction.

The Tornado RC compact industrial monitor features include:

- High performance seals in both the vertical and horizontal axis minimize penetration of dust and moisture in bearing races
- Override knobs replaced with protective caps and O-rings to minimize penetration of dust and moisture in the worm gear area
- 340° maximum total rotation for the horizontal axis
- Horizontal axis has infinitely adjustable travel stops

©Copyright Task Force Tips LLC 2004-2026

3.1 VARIOUS TERMS AND MODELS

The Tornado monitor is available in several different models and inlet connections. Basic body styles are shown below, along with some various parts and controls.

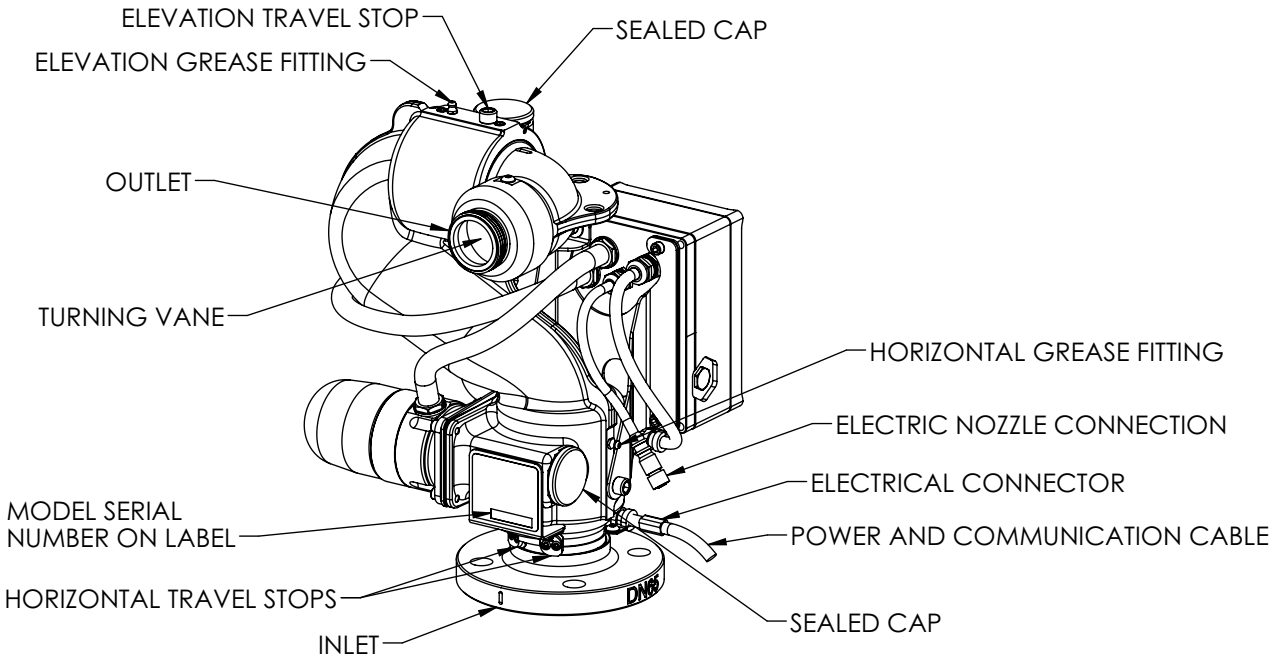

Figure 3.1

3.2 SPECIFICATIONS

3.2.1 MECHANICAL

	US	METRIC
Weight	27.1 lbs.	11.4 kg
Max Flow	500 gpm	1900 l/min
Max Operating Pressure	200 psi	14 bar
Max Nozzle Reaction Force (500 gpm @ 200 psi)	400 lbs	180 kg
Horizontal Travel Range	340° (170° left and right)	
Vertical Travel Range	135° total range (-45° to 90°)	
Maximum Torque Elevation	35 ft•lbs	50 N•m
Maximum Torque Horizontal	35 ft•lbs	50 N•m
Operating temperature range of fluid	33 to 120°F / 1 to 50°C	
Storage temperature range	-40 to 150°F / -40 to 65°C	
Speed Elevation	25 deg/sec	
Speed Horizontal	25 deg/sec	
Mechanical Ingress Protection Rating (Ball Races & Gears)	IP66 / IP67	
Materials Used	ANSI A356.0-T6 Aluminum with Black Wrinkle Powdercoat, Stainless, Buna-N Rubber	

Figure 3.2.1

3.2.2 ELECTRICAL

⚠WARNING **This device is not rated as ignition proof, explosion proof, or intrinsically safe. Use only in locations with adequate ventilation and no hazard of flammable vapor buildup.**

Further specifications for Tornado RC models are shown the Remote Control (RC) Monitor Electrical Controls Supplemental Instructions (LIY-500).

3.2.3 SAFE OPERATING ENVELOPE

WARNING **Damage or injury could result from operating the monitor beyond the safe operating envelope. Do not operate the monitor outside the envelope in the following graph(s).**

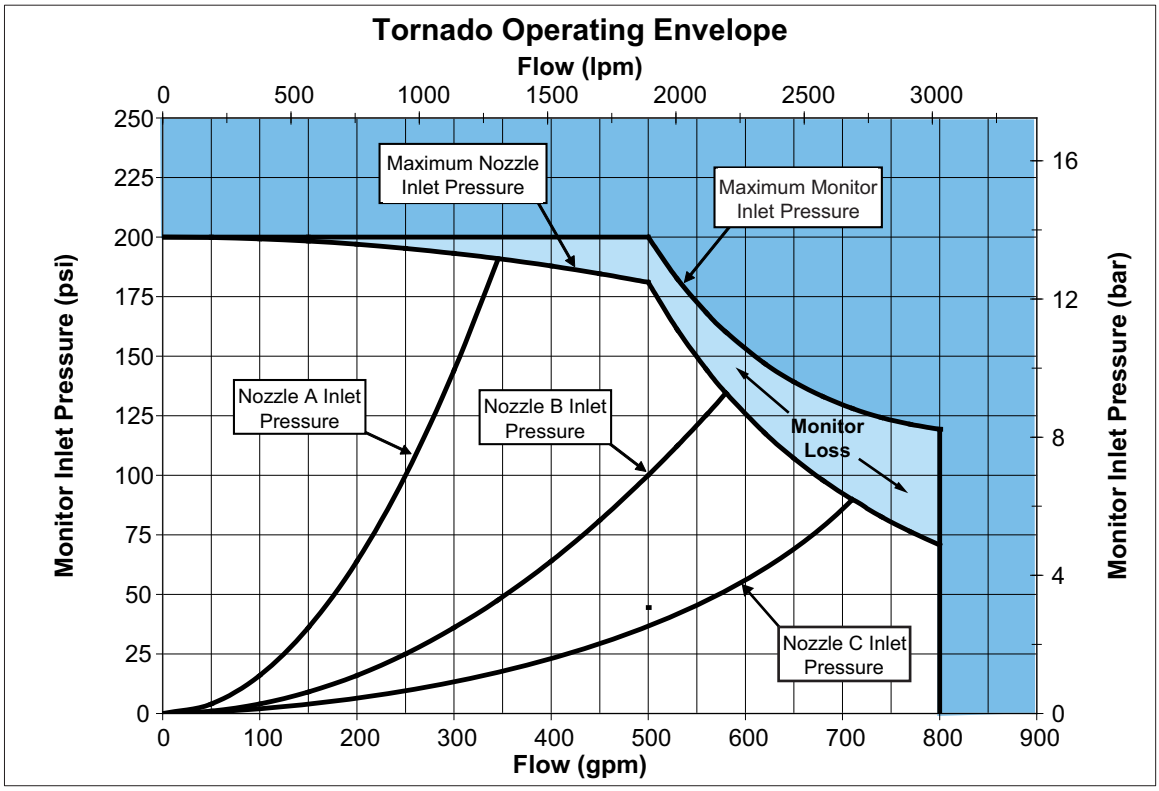

Figure 3.2.3

Nozzle A flows 250 gpm (950 l/min) at 100 psi (7 bar), K factor = 25
Nozzle B flows 500 gpm (1900 l/min) at 100 psi (7 bar), K factor = 50
Nozzle C flows 750 gpm (2900 l/min) at 100 psi (7 bar), K factor = 75

3.3 USE WITH SALT WATER

Use with salt water is permissible provided the equipment is thoroughly cleaned with fresh water after each use. The service life of the equipment may be shortened due to the effects of corrosion, and is not covered under warranty.

3.4 OVERALL DIMENSIONS AND TRAVEL RANGES

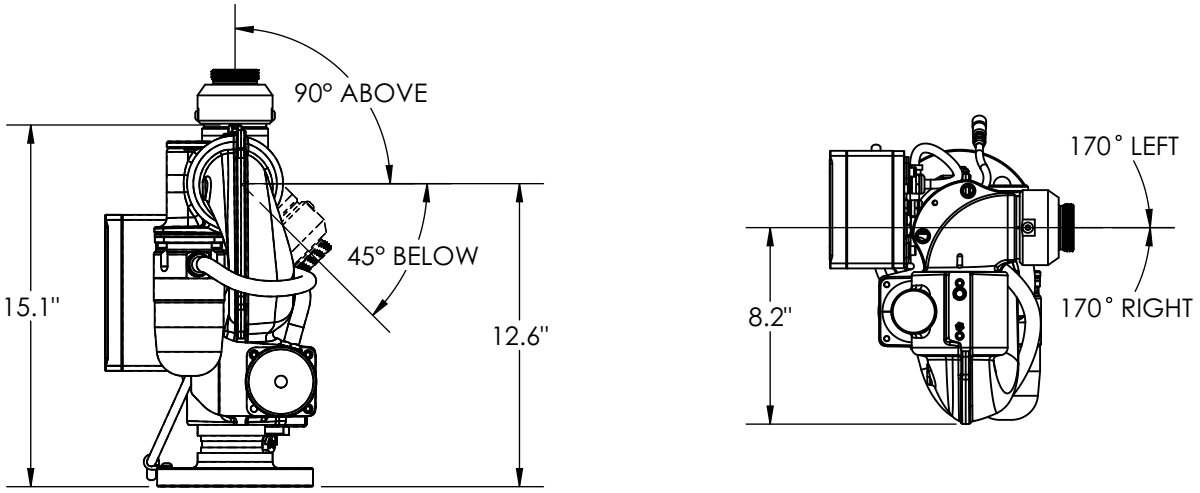

Figure 3.4

4.0 INSTALLATION

See Remote Control (RC) Monitor Electrical Controls Supplemental Instructions (LIY-500) for Tornado RC models.

4.1 STRUCTURAL REQUIREMENTS

⚠WARNING

Reaction forces generated by master stream flows are capable of causing injury and property damage if not properly supported. Monitors should be securely installed by qualified individuals.

- **Mounting objects must be capable of withstanding maximum nozzle reaction force.**
- **The monitor must be securely mounted to rigid support members.**
- **Do not use flanges or pipe made from plastic for monitor mounting.**
- **Torque all fasteners to specified values.**

The structure that the monitor is mounted to must withstand the internal pressure of the monitor as well as shear and bending forces due to nozzle reaction. Nozzle reaction can be as high as 400 lbs (180 kg).

For flanged connections, the use of flat flanges without raised faces is recommended. Use a ring gasket as defined in ASME 16.21 or ISO 7483. Tighten flange bolts in an alternating sequence as shown below. Tighten sequentially each bolt or stud three times to 30%, then 60%, and finally 100% of the specified torque. Tighten to a total of 76-80 ft-lb (100-110 N·m).

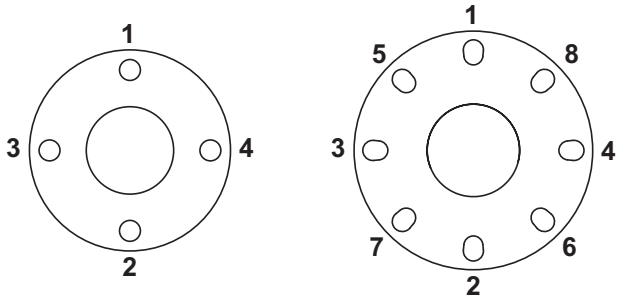

Tighten Sequentially Each Bolt Three Times to a Total of 76-80 ft-lb (100-110 N·m)

Figure 4.1

FLANGE TYPE	OUTSIDE DIAMETER		THICKNESS		BOLT HOLE CIRCLE		# OF BOLTS	SIZE OF BOLTS	
	in	mm	in	mm	in	mm		in	mm
2.5” ANSI 150	6.9	175	0.98	25	5.5	140	4	5/8	16
3” ANSI 125/150-DN80 PN20	7.5	190	0.75	20	6.0	152.5	4	5/8	16
4” ANSI 150-DN100 PN20	9.0	230	0.94	23	7.5	190	8	5/8	16
DN80, PN16 Flange	7.9	200	0.87	22	6.3	160	8	5/8	16
DN100, PN16 Flange	8.7	220	0.87	22	7.1	180	8	5/8	16
DN65 AS2129 Table E Flange	6.5	165	.78	20	5.0	127	4	5/8	16

Table 4.1

©Copyright Task Force Tips LLC 2004-2026

4.2 TRAVEL STOPS

Monitor travel can be limited in either horizontally or vertically. Instructions on the installation of stop bolts and adjustment discs (vertical), and travel stops (horizontal) are shown below.

Vertical Stop Bolt and Adjustment Discs:

1. Remove the Stop Bolt
2. Insert 1 Adjustment Disc in the bolt hole for every 13° of travel limitation.
   A. When facing the front of the monitor, move discs to the left of the bolt hole (toward the monitor) to reduce downward travel.
   B. When facing the front of the monitor, move discs to the right of the bolt hole (toward the outlet elbow) to reduce upward travel.
3. Replace the Stop Bolt

To Install the Horizontal Travel Stops:

1. Align the monitor with the Straight Ahead Reference Mark.
2. When facing the front of the monitor, the travel stop marked "L" must be installed on the left-hand side, and the travel stop marked "R" must be installed on the right-hand side.
3. Hold the travel stop with the letter (L or R) facing up, rotate the travel stop 90° and insert into the coupling track.
4. Rotate back to the original position with the letter facing up.
5. Move the monitor to the desired end of travel and slide the travel stop against the stop ear on the monitor.
6. Apply Loctite 242 (blue) to the screw threads and tighten set screws to lock the travel stop position.
7. Repeat for the other side.

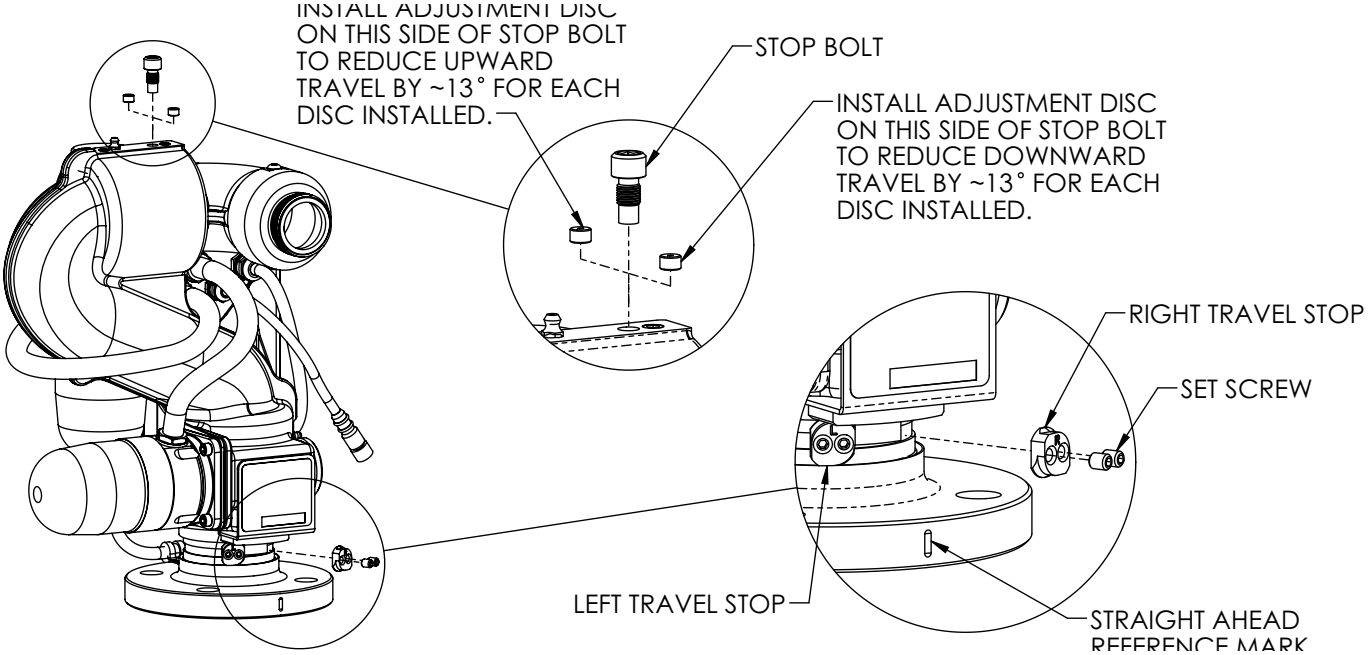

Figure 4.2

4.3 NOZZLE INSTALLATION

The nozzle is simply screwed onto the monitor's exit threads. If the nozzle is installed on a Tornado RC (with electric motors) assure that the nozzle's coupling does not make contact with the horizontal drive motor housing and actuator when the monitor is in its lowest elevation position.

⚠ CAUTION **Mismatched or damaged waterway connections may cause equipment to leak or uncouple under pressure. Failure could result in injury. Equipment must be mated to matched connections.**

⚠ CAUTION **Dissimilar metals coupled together can cause galvanic corrosion that can result in the inability to uncouple the connection, or complete loss of engagement over time. Failure could cause injury. Per NFPA 1930, if dissimilar metals are left coupled together, an anti-corrosive lubricant should be applied to the connection and the coupling should be disconnected and inspected at least quarterly.**

4.4 PRESSURE GAUGE PORT

There is a ¼” NPT female threaded hole on the back of the monitor and the exit elbow. The holes are plugged from the factory. If a pressure gauge is desired, unscrew the plug and install the gage using pipe sealant. Make sure the gauge does not interfere with operation.

4.5 DRAINING RESIDUAL WATER

There is no drain on the Tornado monitor itself. A drain valve should be installed on the piping to which the monitor is attached.

⚠WARNING **Monitors, valves, and piping may be damaged if frozen while containing sufficient amounts of water. Such damage may be difficult to detect visually and can lead to possible damage, injury, or death. Equipment that may be exposed to freezing conditions must be drained immediately following use to prevent damage.**

5.0 OPERATING INSTRUCTIONS

See Remote Control (RC) Monitor Electrical Controls Supplemental Instructions LIY-500 for operation of the Tornado RC Monitors.

6.0 RECOMMENDED PARK POSITION

For truck mounted applications, it is recommended that the monitor be parked in a position such that the monitor’s nozzle rests against a bracket or support surface. If a support surface is not available, run the elevation against one of its travel stops to take some of the backlash out of the gear drive. This will minimize bouncing of the nozzle when the apparatus is traveling. Always be sure the monitor is properly parked before moving the truck. Know the overall height to avoid damage from overhead obstructions such as doors or bridges.

See Remote Control (RC) Monitor Electrical Controls Supplemental Instructions (LIY-500) for information on programming DEPLOY, OSCILLATE and PARK position Tornado RC models.

⚠WARNING **On many vehicle installations, the monitor is the highest point on the apparatus. Damage or injury could occur if there is not sufficient clearance to safely pass under doors or overhead obstructions. Always check stowed position of the monitor before moving.**

6.1 OVERRIDE HEX DRIVE

In the event of electrical system failure on the monitor, the Tornado RC compact industrial monitor is factory supplied with a hex drive in the end of either shaft. Pry the dust caps off from the horizontal or vertical shafts to access the hex drives. A 1/4” hex wrench may be used for manual override.

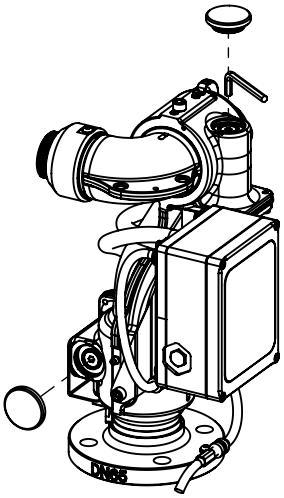

Figure 6.1

7.0 FLOW CHARACTERISTICS

7.1 STACKED TIPS FLOW

NOZZLE DIAMETER	NOZZLE INLET PRESSURE									
	50 PSI		80 PSI		100 PSI		150 PSI		175 PSI	
	FLOW (GPM)	REACTION (LBS)	FLOW (GPM)	REACTION (LBS)	FLOW (GPM)	REACTION (LBS)	FLOW (GPM)	REACTION (LBS)	FLOW (GPM)	REACTION (LBS)
1.0 INCH	210	80	270	120	300	150	360	230	390	260
1-1/4 INCH	330	120	410	190	460	230	-	-	-	-
1-1/2 INCH	470	170	-	-	-	-	-	-	-	-
			FLOW EXCEEDS RATING OF TORNADO MONITOR							

Table 7.1A

NOZZLE DIAMETER	NOZZLE INLET PRESSURE									
	50 PSI		80 PSI		100 PSI		150 PSI		175 PSI	
	FLOW (GPM)	REACTION (LBS)	FLOW (GPM)	REACTION (LBS)	FLOW (GPM)	REACTION (LBS)	FLOW (GPM)	REACTION (LBS)	FLOW (GPM)	REACTION (LBS)
1.0 INCH	210	80	270	120	300	150	360	230	390	260
1-1/4 INCH	330	120	410	190	460	230	-	-	-	-
1-1/2 INCH	470	170	-	-	-	-	-	-	-	-
			FLOW EXCEEDS RATING OF TORNADO MONITOR							

Table 7.1B

7.2 TORNADO MONITOR AND STREAM STRAIGHTENER FRICTION LOSS

Tornado Monitor and Task Force Tips 5 and 10 inch Stream Straightener friction loss.

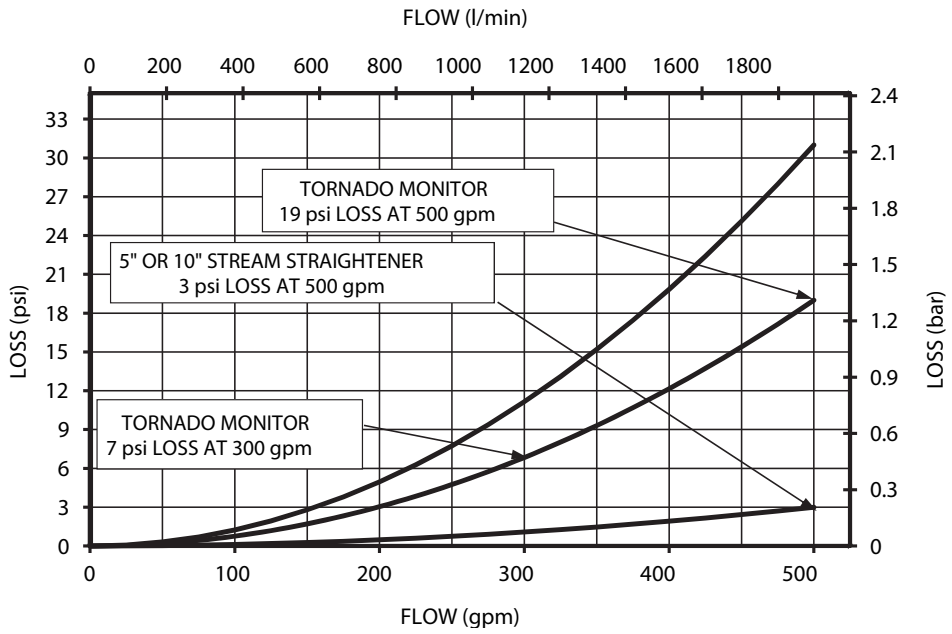

Figure 7.2

7.2.1 STREAM STRAIGHTENERS WITH STACKED TIPS

Even though turbulence through the Tornado monitor is very low, stream quality and reach can be improved with the use of the integral stream straightener on the TFT stacked tip nozzle. The TFT Stream Straightener Friction Loss Graph shows device loss with and without a stream straightener. (see Figure 7.2)

7.2.2 STREAM STRAIGHTENERS WITH FOG NOZZLES

When using a fog nozzle for flows below 300 gpm (1100 l/min), it is recommended that no stream straightener be used. At lower flows, the fog nozzle's flow path serves as a stream straightener. Above 300 gpm (1100 l/min), TFT's 5 inch Stream Straightener will generally improve a fog nozzle's stream.

8.0 WARRANTY

Go to tft.com for warranty information.

9.0 MAINTENANCE

TFT products are designed and manufactured to be damage resistant and require minimal maintenance. However, as the primary firefighting tool upon which your life depends, it should be treated accordingly. The unit should be kept clean and free of dirt by rinsing with water after each use. Any inoperable or damaged parts should be repaired or replaced before placing the unit in service. To help prevent mechanical damage, do not drop or throw equipment.

In applications where appliances are left continuously connected to the apparatus or other devices or are used where water is trapped inside the appliance, the appliance must be flushed with fresh water following each use and inspected for damage.

This appliance should be disconnected, cleaned and visually inspected inside and out at least quarterly, or as water quality and use may require. Moving parts such as handles, valve ball and couplings should be checked for smooth and free operation. Seals shall be greased as needed with Silicone based grease such as Molykote 112. Any scrapes that expose bare aluminum should be cleaned and touched up with enamel paint such as Rust-Oleum. Replace any missing or damaged parts before returning to service.

Any equipment taken out of service due to failure should be returned to the factory for repair or replacement. If you have any questions regarding the testing or maintenance of your valve, please call Task Force Tips at 800-348-2686.

9.1 REQUIRED MAINTENANCE

The Tornado RC Industrial Monitor requires lubrication of the worm gear, bearings, and seal areas of the vertical & horizontal axes on a regular basis. Failure to perform routine lubrication can result in premature component failure.

For regular maintenance, use the following procedure:

Frequency	Capacity	Type of Lubricant
Every 200 hrs. of use	2.3 g **	Moly EP Grease
	**2 pumps using a 14 oz hand-operated grease gun	

1. Use a hand-operated grease gun. DO NOT use a pneumatic grease gun.
2. Clean off grease fittings and attach the grease gun.
3. Apply the recommended amount of grease to each fitting. Pump grease slowly.
4. Clean debris from the vertical and horizontal rotating joints.

NOTE: DO NOT over pump grease.
The monitor's greased areas lead to large chambers that could trap and hold several pounds of grease before becoming visible.

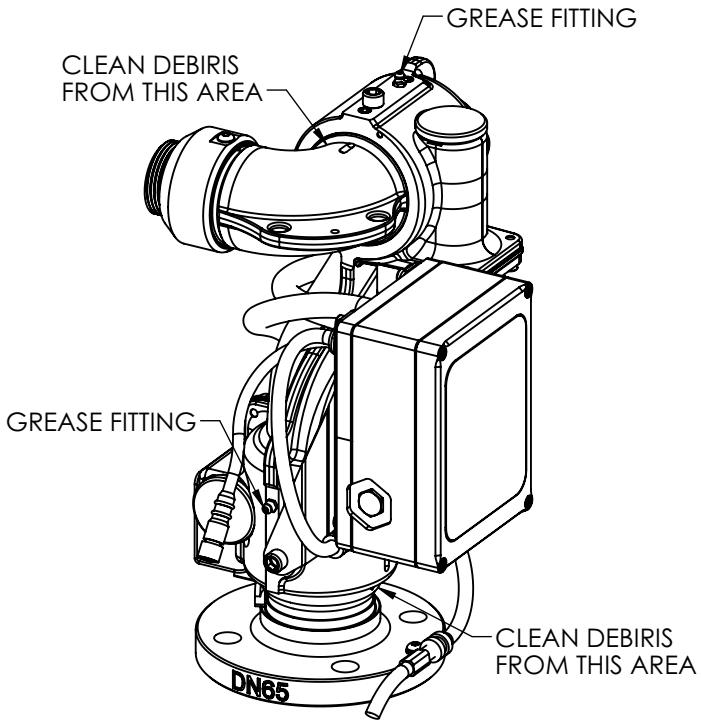

Figure 9.1

9.2 TROUBLE SHOOTING

SYMPTOM	POSSIBLE CAUSE	REMEDY
Leaks	Debris or damage in the seal area	Clean out debris or replace damaged parts
Elevation Binding	Debris or damage to the elevation drive parts	Clean out debris or replace damaged parts
	Lack of lubricant	Grease (see section 10.1)
Horizontal Rotation Binding	Debris or damage to the horizontal drive parts	Clean out debris or replace damaged parts
	Lack of lubricant	Grease (see section 10.1)

9.3 REPAIR

Factory service is available. Factory serviced equipment is repaired by experienced technicians, wet tested to original specifications, and promptly returned. Call TFT service department at 1-800-348-2686 to troubleshoot and, if needed, directions for return. A return for service form can also be obtained at tft.com/Support/Returning-an-Item-for-Service.

Repair parts and service procedures are available for those wishing to perform their own repairs. Task Force Tips assumes no liability for damage to equipment or injury to personnel that is a result of user service. Contact the factory or visit the web site at tft.com for parts lists, exploded views, test procedures and troubleshooting guides.

Performance tests shall be conducted on the equipment after a repair, or anytime a problem is reported to verify operation in accordance with TFT test procedures. Consult factory for the procedure that corresponds to the model and serial number of the equipment. Any equipment which fails the related test criteria should be removed from service immediately. Troubleshooting guides are available with each test procedure or equipment can be returned to the factory for service and testing.

⚠WARNING **It is the responsibility of service technicians to ensure the use of appropriate protective clothing and equipment. The chosen protective clothing and equipment must provide protection from potential hazards users may encounter while servicing equipment. Requirements for protective clothing and equipment are determined by the Authority Having Jurisdiction (AHJ).**

⚠CAUTION **Any alterations to the product or its markings could diminish safety and constitutes a misuse of this product.**

NOTICE **All replacement parts must be obtained from the manufacturer to assure proper performance and operation of the device.**

10.0 EXPLODED VIEWS AND PARTS LISTS

For exploded views and parts lists, go to tft.com/serial number.

11.0 OPERATION AND INSPECTION CHECKLIST

BEFORE EACH USE, appliances must be inspected to this checklist:

1. All valves (if so equipped) open and close fully and smoothly
2. Waterway is clear of obstructions
3. There is no damage to any thread or other connection
4. All locks and hold-down devices work properly
5. The pressure setting on the relief valve (if so equipped) is set correctly
6. Gaskets are in good repair
7. There is no obvious damage such as missing, broken or loose parts
8. There is no damage to the appliance that could impair safe operation (e.g. dents, cracks, corrosion, or other defects)
9. All swiveling elements rotate freely
10. Nozzle is securely attached

BEFORE BEING PLACED BACK IN SERVICE, appliances must be inspected to this list:

1. All valves open and close smoothly and fully
2. The waterway is clear of obstructions
3. There is no damage to any thread or other type connection
4. The pressure setting of the relief valve, if any, is set correctly
5. All locks and hold-down devices work properly
6. Internal gaskets are in good condition
7. There is no damage to the appliance that could impair safe operation (e.g. dents, cracks, corrosion, or other defects)
8. All swiveling connections rotate freely
9. There are no missing parts or components
10. The marking for maximum operating pressure is visible
11. There are no missing, broken, or worn lugs on couplings

⚠WARNING **Equipment failing any part of the checklist is unsafe for use and must have the problem corrected before use or being placed back into service. Operating equipment that has failed the checklist is a misuse of this equipment.**

TASK FORCE TIPS LLC
MADE IN USA · tft.com
3701 Innovation Way, Valparaiso, IN 46383-9327 USA
800-348-2686 · 219-462-6161 · Fax 219-464-7155

©Copyright Task Force Tips LLC 2004-2026