BLITZTAC™

Portable Monitor

INSTRUCTIONS FOR INSTALLATION, OPERATION, AND MAINTENANCE

⚠ DANGER

Understand manual before use. Operation of this device without understanding the manual and receiving proper training is a misuse of this equipment. Obtain safety information at tft.com/serial-number.

This equipment is intended for use by trained and qualified emergency services personnel for firefighting. All personnel using this equipment shall have completed a course of education approved by the Authority Having Jurisdiction (AHJ).

This instruction manual is intended to familiarize firefighters and maintenance personnel with the operation, servicing, and safety procedures associated with this product. This manual should be kept available to all operating and maintenance personnel.

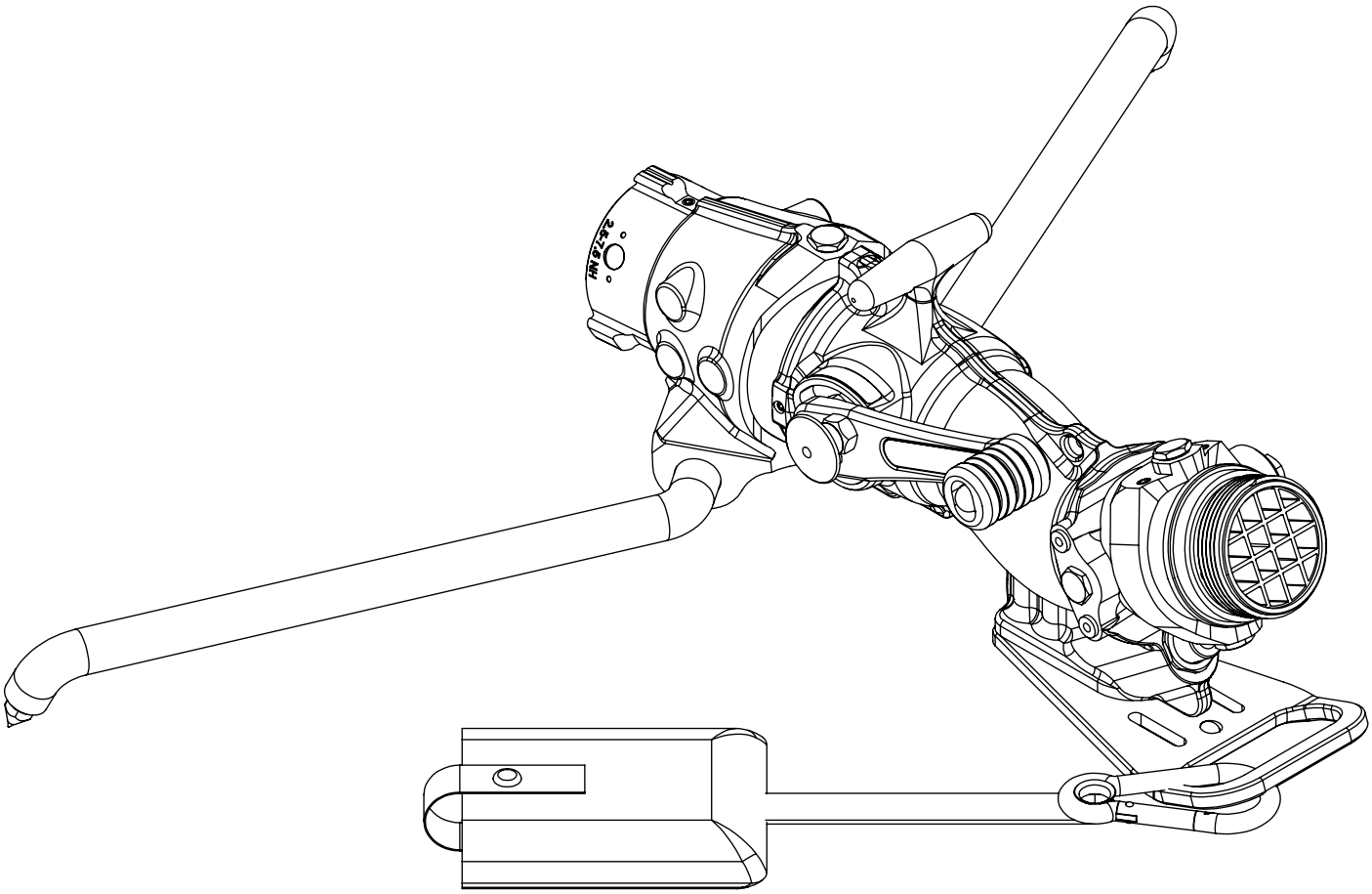

See Section 3.3 for Flow/Pressure Operating Envelope

TASK FORCE TIPS LLC
MADE IN USA · tft.com

3701 Innovation Way, Valparaiso, IN 46383-9327 USA
800-348-2686 · 219-462-6161 · Fax 219-464-7155

©Copyright Task Force Tips LLC 2021-2026

DANGER

PERSONAL RESPONSIBILITY CODE

The member companies of FEMSA that provide emergency response equipment and services want responders to know and understand the following:

1. Firefighting and Emergency Response are inherently dangerous activities requiring proper training in their hazards and the use of extreme caution at all times.
2. **IT IS YOUR RESPONSIBILITY** to read and understand any user's instructions, including purpose and limitations, provided with any piece of equipment you may be called on to use.
3. **IT IS YOUR RESPONSIBILITY** to know that you have been properly trained in Firefighting and/or Emergency Response and in the use, precautions, and care of any equipment you may be called upon to use.
4. **IT IS YOUR RESPONSIBILITY** to be in proper physical condition and to maintain the personal skill level required to operate any equipment you may be called upon to use.
5. **IT IS YOUR RESPONSIBILITY** to know that your equipment is in operable condition and has been maintained in accordance with the manufacturer's instructions.
6. Failure to follow these guidelines may result in death, burns or other severe injury.

Fire and Emergency Manufacturers and Service Association, Inc.
PO Box 147, Lynnfield, MA 01940 • www.FEMSA.org

FEMSA

© 2020 FEMSA. All Rights Reserved.

TABLE OF CONTENTS

1.0 MEANING OF SAFETY SIGNAL WORDS
2.0 SAFETY
3.0 GENERAL INFORMATION
- 3.1 VARIOUS MODELS AND TERMS
- 3.2 MECHANICAL SPECIFICATIONS
- 3.3 OPERATING ENVELOPE
- 3.4 USE WITH SALT WATER
- 3.5 OPERATING INSTRUCTIONS
- 3.6 FLOW VALVE OPERATION
- 3.7 SAFETY VALVE OPERATION
- 3.8 FOLDING LEGS
  - 3.8.1 CARBIDE SPIKES
- 3.9 FULL TIME SWIVEL INLET HOSE COUPLING
- 3.10 OUTLET PIVOTS AND SAFETY ELEVATION PLUNGER
- 3.11 ELEVATION HOLDING MECHANISM

4.0 FLOW CHARACTERISTICS
- 4.1 AUTOMATIC, FIXED, AND SELECTABLE FLOW NOZZLES
- 4.2 STACKED TIPS OR SMOOTHBORE NOZZLES
- 4.3 STREAM STRAIGHTENERS
- 4.4 USE WITH FOAM
- 4.5 PRESSURE LOSS

5.0 DEPLOYMENT OF BLITZTAC PORTABLE MONITOR
- 5.1 CARRYING WITH AN UNCHARGED HOSE
- 5.2 CARRYING WITH A CHARGED HOSE

6.0 ANCHORING
- 6.1 ANCHORING BY WEIGHT
- 6.2 ANCHORING BY SPIKE HOLDS
- 6.3 ANCHORING BY HOOKING LEGS
- 6.4 ANCHORING BY USING THE TIE DOWN STRAP

7.0 STORAGE
8.0 WARRANTY
9.0 MAINTENANCE
- 9.1 SERVICE TESTING
- 9.2 REPAIR

10.0 EXPLODED VIEW AND PARTS LISTS
11.0 OPERATION AND INSPECTION CHECKLIST

SUPPORTING MATERIALS

The following document contains supporting safety and operating information pertaining to the equipment

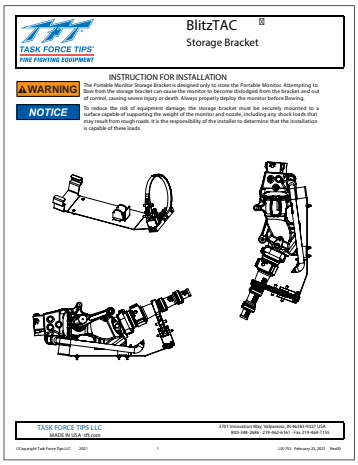

TASK FORCE TIPS
FIRE FIGHTING EQUIPMENT

BlitzTAC
Storage Bracket

INSTRUCTION FOR INSTALLATION

WARNING The Portable Monitor Storage Bracket is designed only to store the Portable Monitor. Attempting to flow from the storage box/cart can cause the monitor to become dislodged from the bracket and out of control, causing severe injury or death. Always properly deploy the monitor before flowing.

NOTICE To reduce the risk of equipment damage, the storage bracket must be securely mounted to a surface capable of supporting the weight of the monitor and nozzle, including any shock loads that may result from rough roads. It is the responsibility of the installer to determine that the installation is capable of these loads.

TASK FORCE TIPS LLC
MADE IN USA - tft.com

5757 Innovation Way, Valparaiso, IN 46383-9327 USA
800-348-2404 · 219-462-6161 · Fax 219-464-7103

©Copyright Task Force Tips LLC 2021 1 LIX-755 February 23, 2021 Rev00

LIX-755 BLITZTAC Storage Bracket

1.0 MEANING OF SAFETY SIGNAL WORDS

A safety related message is identified by a safety alert symbol and a signal word to indicate the level of risk involved with a particular hazard. Per ANSI Z535.6, the definitions of the four signal words are as follows:

⚠ DANGER — **DANGER indicates a hazardous situation which, if not avoided, will result in death or serious injury.**

⚠ WARNING — **WARNING indicates a hazardous situation which, if not avoided, could result in death or serious injury.**

⚠ CAUTION — **CAUTION indicates a potentially hazardous situation which, if not avoided, could result in minor or moderate injury.**

NOTICE — **NOTICE is used to address practices not related to physical injury.**

2.0 SAFETY

⚠ DANGER — **An inadequate supply of pressure and/or flow will cause an ineffective stream and can result in injury or death. Choose operating conditions to deliver adequate fire suppression. See flow graphs.**

⚠ DANGER — **Sudden change in position of an improperly secured monitor can result in an out of control monitor. An out of control monitor can spray water in unintended directions or become a projectile, causing serious injury or death. To reduce the risk of an out of control monitor:**

- **Do not attempt to move the monitor while flowing**
- **Keep elevation as high as practical**
- **Test Shut-off valve before each use**
- **Securely tie off monitor to an immovable object**
- **Ensure all legs are in the unfolded position**
- **Hook legs on stationary objects such as door frames, sign posts, etc.**
- **Choose surfaces that allow all spikes to contact the ground**
- **Do not place the monitor on top of debris, objects, or uneven terrain**
- **Assure that the hose is not lifting spikes off the ground**
- **If stability is questionable, reduce flow to limit reaction**

In the event of an out of control monitor:

- **Immediately retreat to a safe distance**
- **Shut down the water hose at its source before attempting to re-secure the monitor**

⚠ WARNING — **Interrupting flow to the monitor could cause injury or death. Avoid situations that may interrupt flow to the monitor such as hose line kinks, traffic running over hose, and automatic doors or devices that can pinch the hose.**

⚠ WARNING — **The stream exiting a nozzle is very powerful and capable of causing injury and property damage. Make sure the nozzle is securely attached and pointing in a safe direction before water is turned on. Do not direct water stream to cause injury or damage to persons or property.**

⚠ WARNING — **Equipment may be damaged if frozen while containing significant amounts of water. Such damage may be difficult to detect visually. Subsequent pressurization can lead to injury or death. Any time the equipment is subject to possible damage due to freezing, it must be tested and approved for use by qualified personnel before being considered safe for use.**

⚠ CAUTION — **Mismatched or damaged waterway connections may cause equipment to leak or uncouple under pressure. Failure could result in injury. Equipment must be mated to matched connections.**

⚠ CAUTION — **Dissimilar metals coupled together can cause galvanic corrosion that can result in the inability to uncouple the connection, or complete loss of engagement over time. Failure could cause injury. Per NFPA 1930, if dissimilar metals are left coupled together, an anti-corrosive lubricant should be applied to the connection and the coupling should be disconnected and inspected at least quarterly.**

NOTICE — **To prevent mechanical damage, do not drop or throw equipment.**

3.0 GENERAL INFORMATION

The BLITZTAC Portable Monitor is an efficient, compact and easy to maneuver portable monitor. The monitor is a lightweight aluminum unit, capable of delivering up to 500 gpm of water. This monitor can be mounted in a pre-connected state on the storage bracket to achieve a quick and effective initial attack.

3.1 VARIOUS MODELS AND TERMS

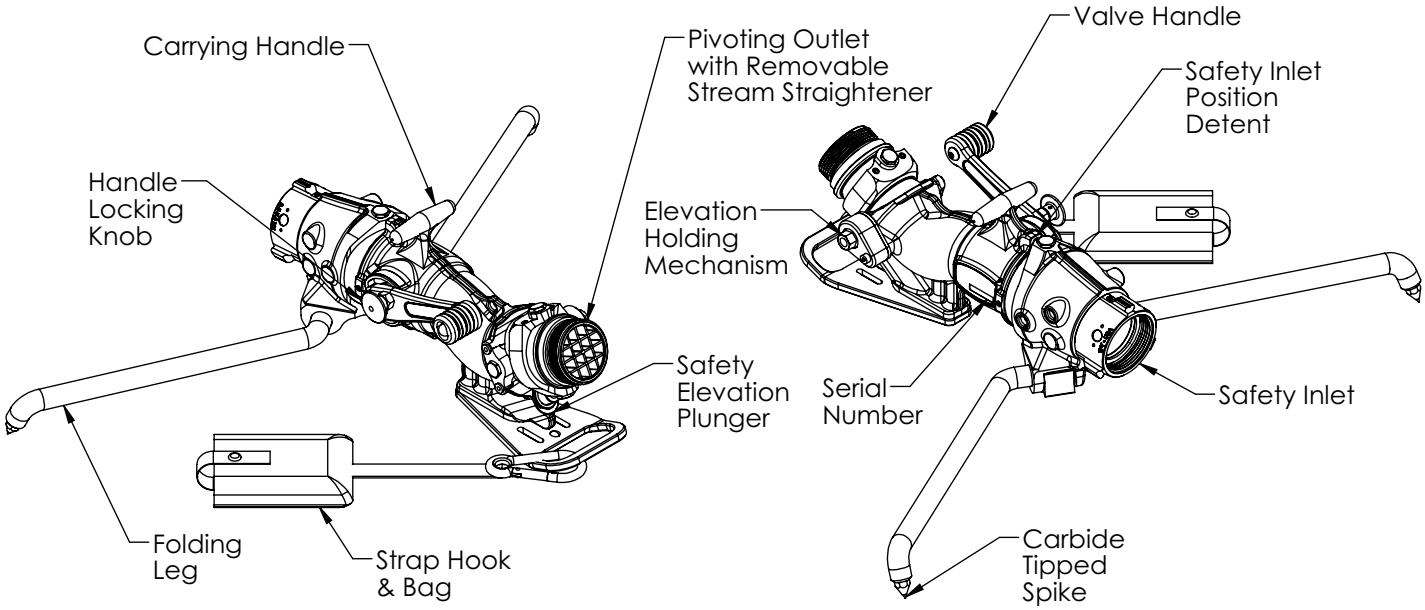

Figure 3.1

3.2 MECHANICAL SPECIFICATIONS

Size (legs folded)	20.8”L x 8.6”W x 8.3”H	(527 mm x 218 mm x 212 mm)
Size (legs unfolded)	22.3”L x 34.8”W x 11.8”H	(566 mm x 884 mm x 299 mm)
Weight (without nozzle)	19.2 lbs	(8.7 kg)
Maximum Inlet Pressure flowing	175 psi	(12 bar)
Flow Range	up to 500 gpm	(up to 2000 L/min)
Operating temperature of fluid	33 to 120°F	(1 to 50°C)
Storage temperature range	-40 to 150°F	(-40 to 65°C)
Standard Inlet Coupling	2 ½” NH Female	
Standard Outlet	2 ½” NH Male	
Vertical Stream Range (manned)	10 to 50° above horizon	
Vertical Stream Range (unmanned)	25 to 50° above horizon	
Horizontal Stream Range	+/- 20° either side of centerline	
Materials used	Aluminum 6000 series hard anodized MIL8625 class 3 type 2, stainless steel 300 series, nylon 6-6	

Table 3.2

3.3 OPERATING ENVELOPE

WARNING **Damage or injury could result from operating the monitor beyond the safe operating envelope. Do not operate the monitor outside the envelope in the following graph(s).**

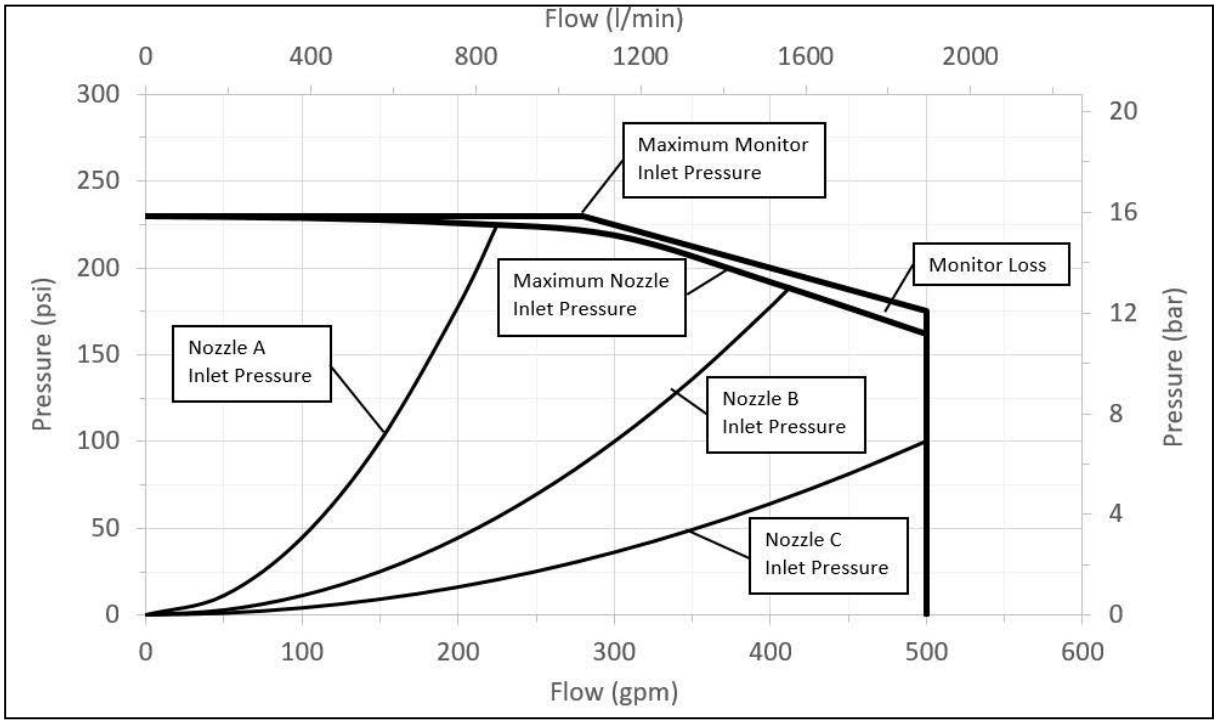

Nozzle A flows 150 gpm (570 L/min) at 100 psi (6.9 bar), K factor = 15
Nozzle B flows 300 gpm (1140 L/min) at 100 psi (6.9 bar), K factor = 30
Nozzle C flows 500 gpm (1900 L/min) at 100 psi (6.9 bar), K factor = 50

Figure 3.3

3.4 USE WITH SALT WATER

Use with salt water is permissible provided the equipment is thoroughly cleaned with fresh water after each use. The service life of the equipment may be shortened due to the effects of corrosion, and is not covered under warranty.

3.5 OPERATING INSTRUCTIONS

3.6 FLOW VALVE OPERATION

The valve handle is locked in the closed position so that the portable monitor may be carried/moved without the valve inadvertently opening when water flow is not desired. To unlock the valve handle from the closed position:

1. Pull the knob on the right side of the valve handle.
2. While pulling the knob, use the other hand to move the valve handle slowly to an open position.

As soon as valve is opened the knob may be released. Valve handle may be moved to any position by pushing or pulling on the valve handle. When the valve is closed the valve handle automatically locks and must be unlocked again to reopen. The monitor has a label that indicates the direction to open and close the valve.

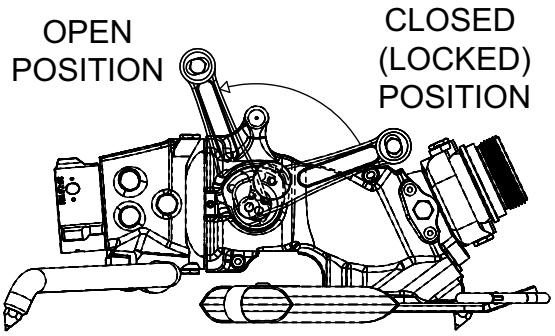

Figure 3.6

WARNING **Sudden changes in valve position can cause pressure spikes (water hammer) and could lead to hose or pipe failure or an out of control monitor. Open and close the valve slowly to avoid water hammer.**

3.7 SAFETY VALVE OPERATION

DANGER **Disconnecting, overriding, or tampering with this safety device may result in an out of control monitor causing severe injury or death. Do not alter the safety valve in any way.**

WARNING **While the safety valve reduces flow to the monitor, the remaining flow is still capable of causing damage and/or injury. Exercise caution around monitor when valve is tripped or being reset. Always be sure to anchor monitor.**

The BLITZTAC is equipped with a safety valve. The safety valve reduces the flow area through the monitor by 66%, should the monitor start to move. In the reduced flow condition, the reaction force is less and reduces the risk of injury.

To set the safety valve:

1. With the flow valve closed, set up the monitor and charge the hose line.
2. Align the safety valve directly behind the monitor so the detent ball is engaged.
3. Point the nozzle in the desired direction.
4. Slowly open the flow valve.

If the safety valve trips:

1. Fully close the flow valve.
2. Determine and correct the condition that caused the valve to trip.
3. Reset the safety valve and resume flow by following steps 2-4 above.

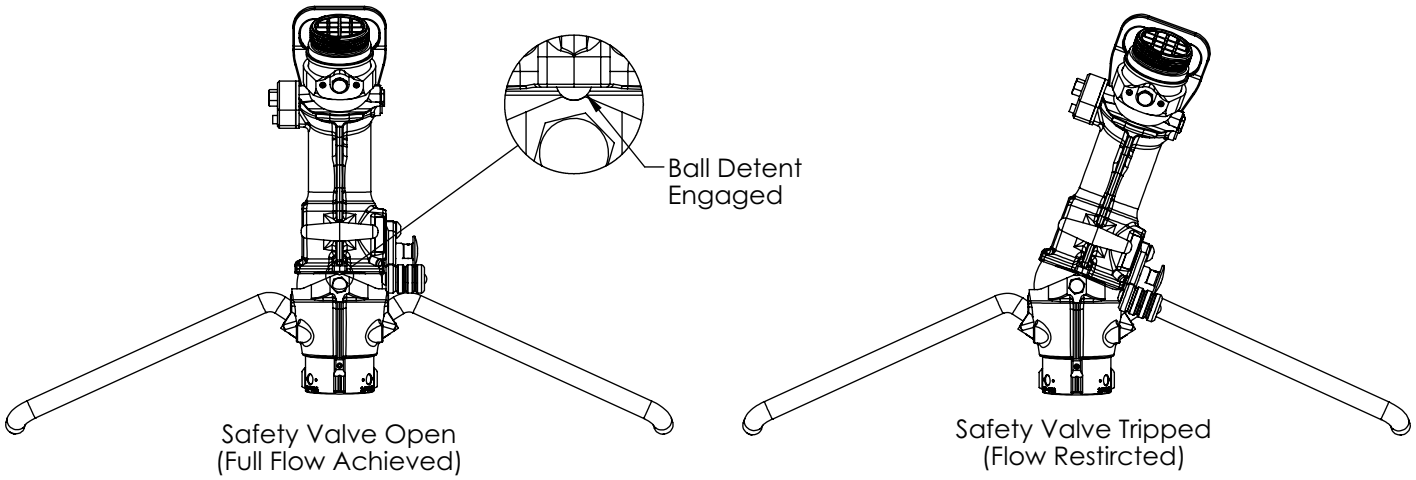

3.8 FOLDING LEGS

The portable monitor has two legs that fold for storage and unfold for operation. The legs are held in the folded and unfolded position by spring detents. To fold or unfold the legs:

1. Grasp the spike end of one leg and pivot it to the folded or unfolded position.
2. Repeat for the other leg.

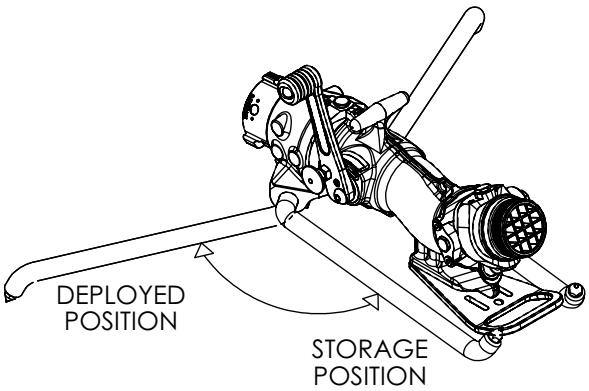

Figure 3.8

WARNING **In the unfolded position, the legs provide a stable base for operation of the monitor. Lack of stability can cause an out of control monitor resulting in injury or death. Do not operate as a portable monitor with one or both legs in the folded position.**

3.8.1 CARBIDE SPIKES

The BLITZTAC Portable Monitor has 3 tungsten carbide tipped spikes on the legs and the base to resist sliding by digging into the surface the monitor is sitting on. The amount of sliding force these spikes can withstand depends upon the amount of downward and sideways force that is on the base and the hardness and texture of the surface the spikes are in contact with. At low elevation angles, it is difficult for these spikes to resist sliding. These spikes are essential to safe operation of the monitor and must be in contact with the ground at all times. Set the monitor on an even surface so that all three spikes contact the ground. Replace any spike if the tip diameter exceeds 1/16 inch (1.6mm).

⚠WARNING **For stable operation all spikes must maintain contact with the ground. Lack of stability can cause an out of control monitor resulting in injury or death. Do not place the monitor on top of debris, objects, or uneven terrain that could keep any of the spikes from contacting the ground.**

⚠WARNING **On hard slippery surfaces the spikes may provide little resistance to sliding. A sliding monitor may become out of control and may cause injury or death.**
To help increase resistance to sliding:

- **Tie off the monitor**
- **Hook the legs on a stationary object**
- **Apply a person's weight to the monitor**
- **Replace any spike if the tip diameter exceeds 1/16 inch (1.6 mm)**

⚠CAUTION **Spikes are sharp and exposed. Use care around spikes to avoid injury and damage to clothing or other property.**

3.9 FULL TIME SWIVEL INLET HOSE COUPLING

The BLITZTAC portable monitor has a full-time swiveling inlet coupling to minimize lifting of the leg spikes caused by twisting of the hose. The monitor is equipped with three spikes to provide traction when flowing from the ground. For the spikes to provide traction they must remain in contact with the ground. Assure that the hose is not on top of anything that would cause the spikes to be lifted off the ground.

3.10 OUTLET PIVOTS AND SAFETY ELEVATION PLUNGER

The monitor's outlet pivots allow for 20 degrees of horizontal rotation either side of center. The elevation range is from 10 to 50 degrees manned and 25 to 50 degrees unmanned. While manned, to lower the outlet below the 25 degrees elevation, just push down the outlet to the desired elevation. Below the outlet pivot is a spring-loaded plunger that returns the outlet to 25 degrees if the operator releases on the outlet or the monitor is unmanned. The pivots are easy to reposition under pressure and are good for rapid redirecting of the stream.

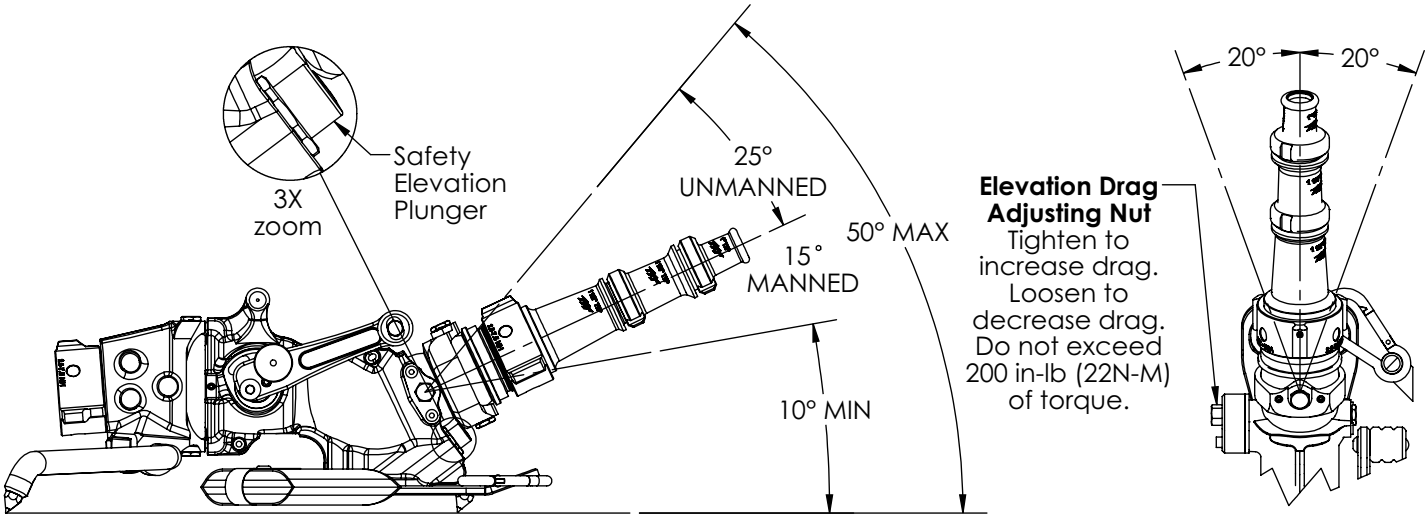

Figure 3.10

3.11 ELEVATION HOLDING MECHANISM

The elevation pivot has a mechanism to support the weight of a nozzle. It is factory set to support the weight of nozzles likely to be used. It may be adjusted. The mechanism releases when raising the nozzle so upwards drag from the mechanism is not felt. Avoid the use of long stream straighteners or heavy nozzles which may overcome the holding torque of the elevation mechanism.

4.0 FLOW CHARACTERISTICS

The BLITZTAC portable monitor is designed for maximum flow of 500 GPM (2000 L/min) @ 175 PSI (12 BAR) and a maximum operating pressure of 230 PSI (16 BAR) at lower flows. Do not exceed these limits.

4.1 AUTOMATIC, FIXED, AND SELECTABLE FLOW NOZZLES

A variety of water or foam nozzles may be used with the BLITZTAC portable monitor.

Automatic nozzles maintain a constant pressure by adjusting their opening to match the available flow. Consult the nozzle manufacturer for maximum flow and pressure ratings. In all cases do not exceed 500 GPM (2000 LPM) @ 175 PSI (12 BAR) or 230 PSI (16 BAR). See Section 3.3 on page 6.

4.2 STACKED TIPS OR SMOOTHBORE NOZZLES

NOZZLE DIAMETER	NOZZLE INLET PRESSURE									
	20 PSI		40 PSI		60 PSI		80 PSI		100 PSI	
	FLOW (GPM)	REACTION (LBS)	FLOW (GPM)	REACTION (LBS)	FLOW (GPM)	REACTION (LBS)	FLOW (GPM)	REACTION (LBS)	FLOW (GPM)	REACTION (LBS)
1-3/8”	251	59	355	119	435	178	500	236	---	---
1-1/2”	299	71	423	141	---	---	---	---	---	---
1-3/4”	407	96	---	---	---	---	---	---	---	---

NOZZLE DIAMETER	NOZZLE INLET PRESSURE									
	1.3 BAR		2.6 BAR		3.8 BAR		5.1 BAR		6.4 BAR	
	FLOW (L/min)	REACTION (KG)	FLOW (L/min)	REACTION (KG)	FLOW (L/min)	REACTION (KG)	FLOW (L/min)	REACTION (KG)	FLOW (L/min)	REACTION (KG)
35 mm	951	27	1344	54	1646	81	1893	108	---	---
38 mm	1131	32	1600	64	---	---	---	---	---	---
44 mm	1540	44	---	---	---	---	---	---	---	---

--- **FLOW EXCEEDS RATING OF BLITZTAC PORTABLE MONITOR**

Table 4.2

4.3 STREAM STRAIGHTENERS

Stream quality, especially with smooth bore nozzles, is generally improved with the use of a stream straightener. A stream straightener is integrated into the exit of the monitor.

4.4 USE WITH FOAM

The monitor may be used with various foam nozzles and foam solutions. Refer to fire service training for the proper use of foam.

WARNING **For Class B fires, lack of foam or interruption in the foam stream can cause a break in the foam blanket and greatly increase the risk of injury or death. Follow procedures established by the AHJ for the specific fuel and conditions.**

WARNING **Improper use of foam or using the wrong type of foam can result in illness, injury, or damage to the environment. Follow foam manufacturer’s instructions and fire service training as directed by the AHJ.**

WARNING **Use of compressed air foam (CAF) with portable monitors can cause sudden surges in nozzle reaction force resulting in risk of injury or death from hose whipping or an out of control monitor. Be prepared for sudden changes in nozzle reaction caused by:**

- **Slug loading (Loss of foam concentrate sends slugs of air and water into the nozzle)**
- **Sudden release of built-up pressure in the hose when opening a nozzle**

©Copyright Task Force Tips LLC 2021-2026

4.5 PRESSURE LOSS

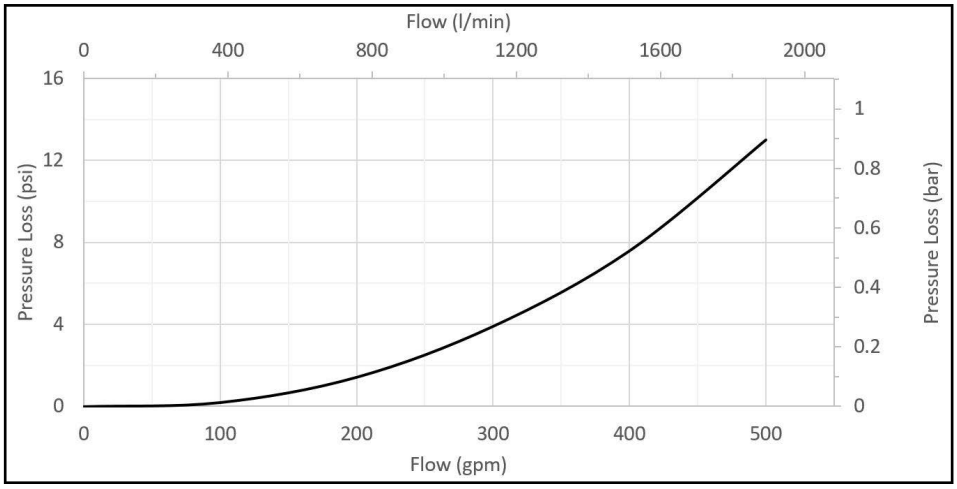

Figure 4.5

5.0 DEPLOYMENT OF BLITZTAC PORTABLE MONITOR

It is the responsibility of the Authority Having Jurisdiction (AHJ) to determine physical capabilities and suitability for an individual's use of this equipment.

5.1 CARRYING WITH AN UNCHARGED HOSE

On a preconnected hose line the monitor may be carried by the T-shaped handle, over the shoulder, or by the front handle with the legs folded as illustrated.

Figure 5.1

5.2 CARRYING WITH A CHARGED HOSE

On a charged hose the BLITZTAC portable monitor may be carried by holding the T-shaped handle located on top of valve body as shown. Shut-off valve handle should be locked in the closed position to keep the flow valve from inadvertently opening.

Figure 5.2

6.0 ANCHORING

The nozzle reaction force on the BLITZTAC portable monitor may be as high as 330 lbs - 500 GPM at 175 PSI (150 kg- 2000 LPM at 12 BAR). This nozzle reaction must be restrained to keep the monitor from moving.

The monitor should be anchored from moving by one or more of these methods but is ultimately the responsibility of the user to follow the direction of the AHJ.

METHOD	RISK of MOVEMENT
Anchoring by Weight	**HIGH**
Anchoring by Spike Holds	**MEDIUM**
Hooking Legs on Vertical Surfaces	**MEDIUM**
Using the Tie Down Strap	**LOW**

6.1 ANCHORING BY WEIGHT

On surfaces with good traction a person's weight on the monitor and/or hose may be sufficient to keep the monitor from sliding. This is highly dependent on the friction of the surface. The ability to keep one or more people's weight on the monitor is subject to operator fatigue and may not be as reliable as other methods. Operating at limited flows will also reduce the risk of sliding.

6.2 ANCHORING BY SPIKE HOLDS

The holding ability of the spikes is generally excellent on surfaces like asphalt, wooden and carpeted floors because they allow the spike to penetrate well. On hard smooth surfaces such as ceramic tile, smooth concrete, marble, terrazzo, or steel decking the BLITZTAC portable monitor's spikes may not hold well. Placing the spikes into cracks, expansion joints, gratings or the like will help hold the monitor from sliding. Even with the spikes anchored, sliding may be caused by the surface cracking under the load, or from the hose or nozzle moving the monitor thereby dislodging the spikes from their hold.

The holding ability of the spikes on soft surfaces such as sand, gravel and mud is generally poor. Other anchoring methods should be considered.

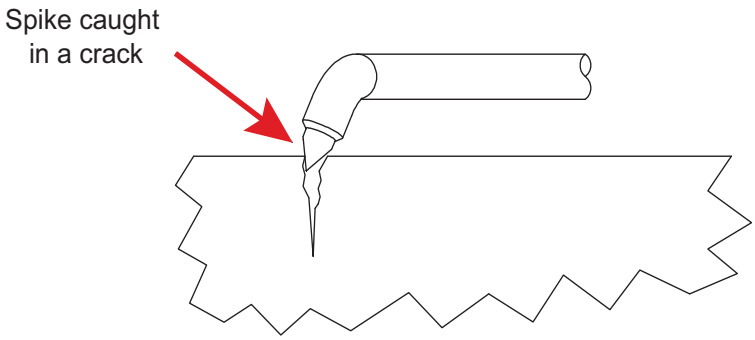

Figure 6.2

6.3 ANCHORING BY HOOKING LEGS

The legs on the BLITZTAC portable monitor point back slightly so they can act as a hook for anchoring on posts, walls, door frames or other fixed objects. Sliding can occur if the legs are unhooked due to the influence of the hose, nozzle, or operator.

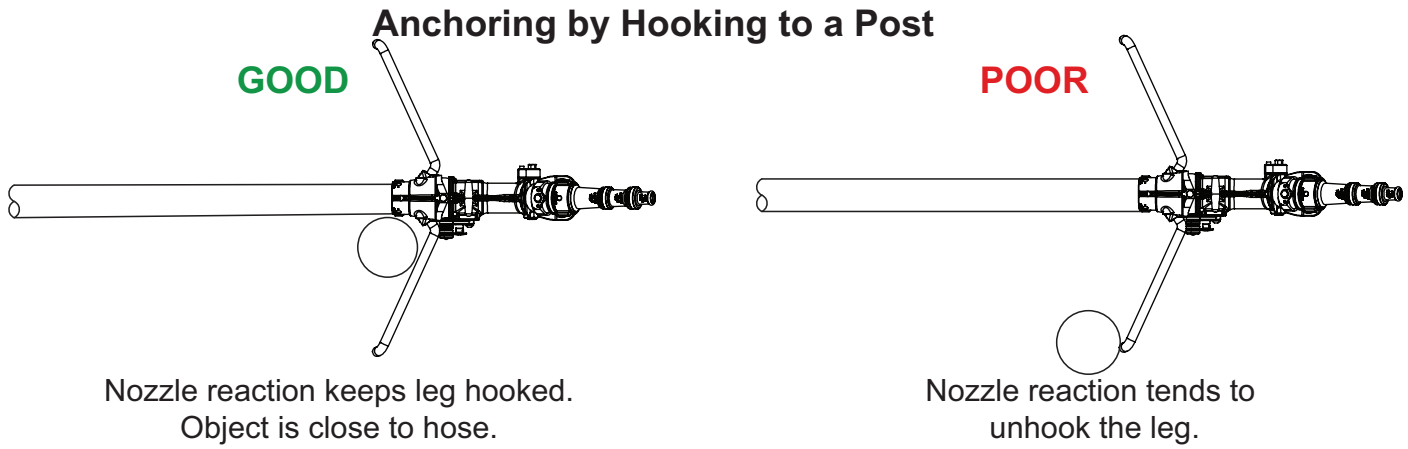

Figure 6.3A

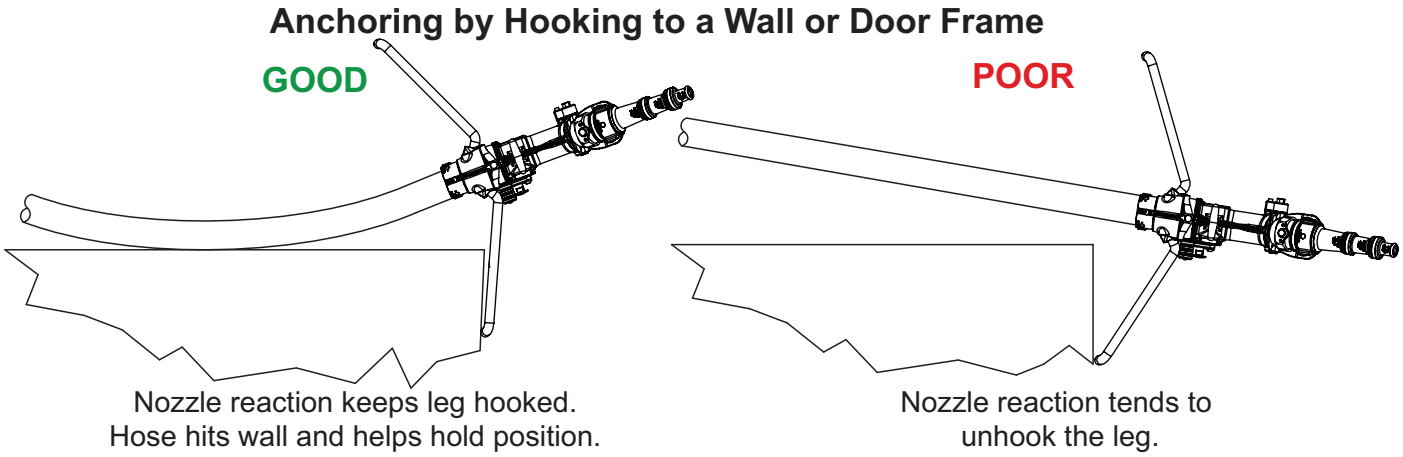

Figure 6.3B

6.4 ANCHORING BY USING THE TIE DOWN STRAP

The safest method of restraining the monitor is to use a tie down strap. It is inherently more reliable than other methods since it does not rely on traction or digging in of the spikes. It is also the safest method because even if the monitor slides, its travel is limited by the strap length. A safety strap/hook system and storage bag is attached to the monitor. The strap may be wrapped around an object, snapped back onto the strap itself, and pulled tight. Keep the entire length of the strap as close to the ground as possible.

If the strap is too short to reach a suitable anchor, it may be extended with strong rope or chain. Keep the distance between the monitor and anchor as short as possible. Remove all slack between the monitor and anchor before flowing water.

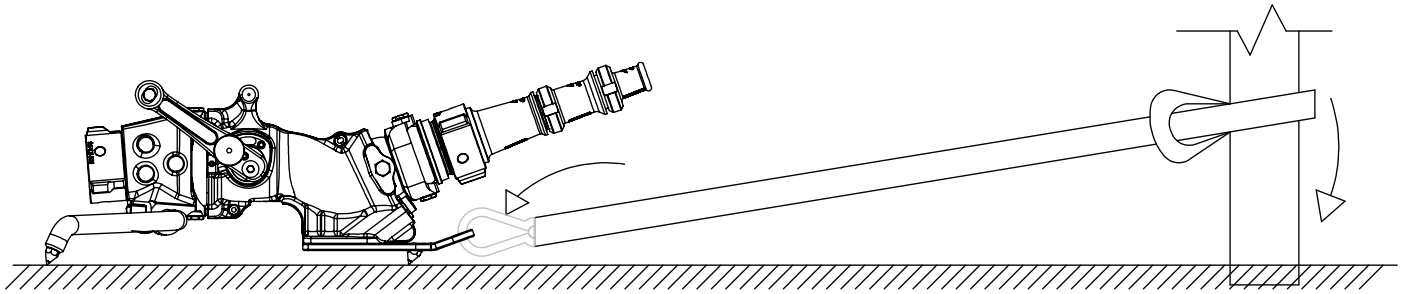

Figure 6.4

⚠WARNING **Personnel in the path of an out of control monitor have and increase risk of injury or death. Securely tying the monitor off to an immovable object can limit the monitor travel in the event of an out of control monitor. Always tie off the monitor when it is in use. Remove all slack between the anchor and monitor before flowing water.**

7.0 STORAGE

The monitor may be stored pre-connected to its hose on the optional storage bracket, TFT part number XXB-B. The storage bracket may be mounted on a horizontal surface, or a vertical surface with the nozzle end pointing down or sideways.

To mount the bracket follow the instructions provided with the bracket kit.

⚠WARNING **The Portable Monitor Storage Bracket is designed only to store the Portable Monitor. Attempting to flow from the storage bracket can cause the monitor to become dislodged from the bracket and out of control, causing severe injury or death. Always properly deploy the monitor before flowing.**

8.0 WARRANTY

Go to tft.com for all warranty information.

9.0 MAINTENANCE

TFT products are designed and manufactured to be damage resistant and require minimal maintenance. However, as the primary firefighting tool upon which your life depends, it should be treated accordingly. The unit should be kept clean and free of dirt by rinsing with water after each use. Any inoperable or damaged parts should be repaired or replaced before placing the unit in service. To help prevent mechanical damage, do not drop or throw equipment.

In applications where appliances are left continuously connected to the apparatus or other devices or are used where water is trapped inside the appliance, the appliance must be flushed with fresh water following each use and inspected for damage.

This appliance should be disconnected, cleaned and visually inspected inside and out at least quarterly, or as water quality and use may require. Moving parts such as handles, valve ball and couplings should be checked for smooth and free operation. Seals shall be greased as needed with Silicone based grease such as Molykote 112. Any scrapes that expose bare aluminum should be cleaned and touched up with enamel paint such as Rust-Oleum. Replace any missing or damaged parts before returning to service.

Any equipment taken out of service due to failure should be returned to the factory for repair or replacement. If you have any questions regarding the testing or maintenance of your valve, please call Task Force Tips at 800-348-2686.

9.1 SERVICE TESTING

In accordance with NFPA 1930, equipment must be tested a minimum of annually. Units failing any part of this test must be removed from service, repaired and retested upon completion of the repair.

9.2 REPAIR

Factory service is available. Factory serviced equipment is repaired by experienced technicians, wet tested to original specifications, and promptly returned. Call TFT service department at 1-800-348-2686 to troubleshoot and, if needed, directions for return. A return for service form can also be obtained at tft.com/Support/Returning-an-Item-for-Service.

Repair parts and service procedures are available for those wishing to perform their own repairs. Task Force Tips assumes no liability for damage to equipment or injury to personnel that is a result of user service. Contact the factory or visit the web site at tft.com for parts lists, exploded views, test procedures and troubleshooting guides.

Performance tests shall be conducted on the equipment after a repair, or anytime a problem is reported to verify operation in accordance with TFT test procedures. Consult factory for the procedure that corresponds to the model and serial number of the equipment. Any equipment which fails the related test criteria should be removed from service immediately. Troubleshooting guides are available with each test procedure or equipment can be returned to the factory for service and testing.

WARNING **It is the responsibility of service technicians to ensure the use of appropriate protective clothing and equipment. The chosen protective clothing and equipment must provide protection from potential hazards users may encounter while servicing equipment. Requirements for protective clothing and equipment are determined by the Authority Having Jurisdiction (AHJ).**

CAUTION **Any alterations to the product or its markings could diminish safety and constitutes a misuse of this product.**

NOTICE **All replacement parts must be obtained from the manufacturer to assure proper performance and operation of the device.**

10.0 EXPLODED VIEW AND PARTS LISTS

Exploded views and parts lists are available at tft.com/serial-number.

11.0 OPERATION AND INSPECTION CHECKLIST

Monitor must be inspected for proper operation and function according to this checklist before each use. Before flowing water check:

1) There is no damage to the appliance that could impair safe operation (e.g. dents, cracks, corrosion, missing, broken or loose parts, damaged markings, or other defects)
   - Waterway is clear of obstructions
   - Gaskets are in good repair
   - Hose and nozzle are securely attached.
   - The pressure setting on the relief valve (if so equipped) is set correctly
2) Hose and nozzle are securely attached.

7) Monitor is anchored and securely tied off to an immovable object with no slack in the anchor strap.

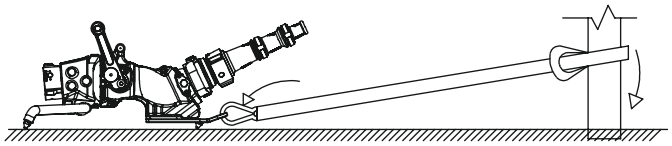

• Tied Off (required) • Hooked Leg • Spike Hold • Weight

3) Both legs are fully open.
4) All three spikes are in contact with the ground.

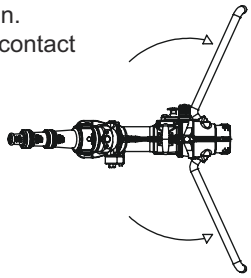

8) Outlet pivots smoothly in both directions and elevation safety plunger is operational.

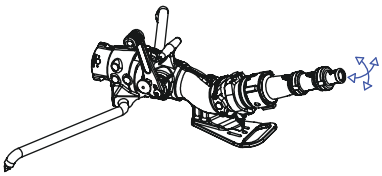

5) Valve handle locks when closed and releases.

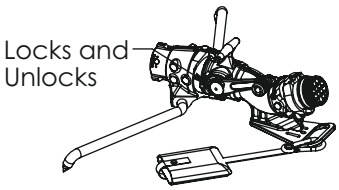

9) Shut-Off valve is operational. (see section 3.7)

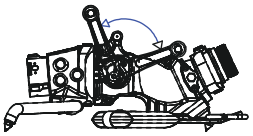

6) Inlet coupling swivels freely when hose is charged.

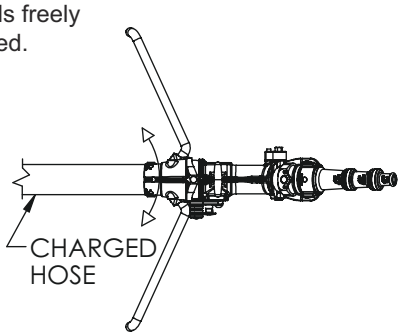

10) Monitor is pointed in a safe direction.

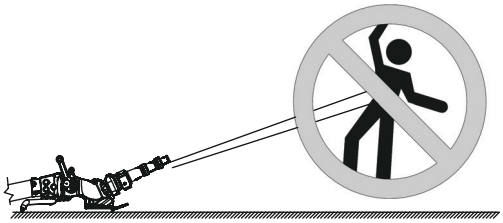

WARNING **Equipment failing any part of the checklist is unsafe for use and must have the problem corrected before use or being placed back into service. Operating equipment that has failed the checklist is a misuse of this equipment.**

TASK FORCE TIPS LLC
MADE IN USA · tft.com

3701 Innovation Way, Valparaiso, IN 46383-9327 USA
800-348-2686 · 219-462-6161 · Fax 219-464-7155

©Copyright Task Force Tips LLC 2021-2026