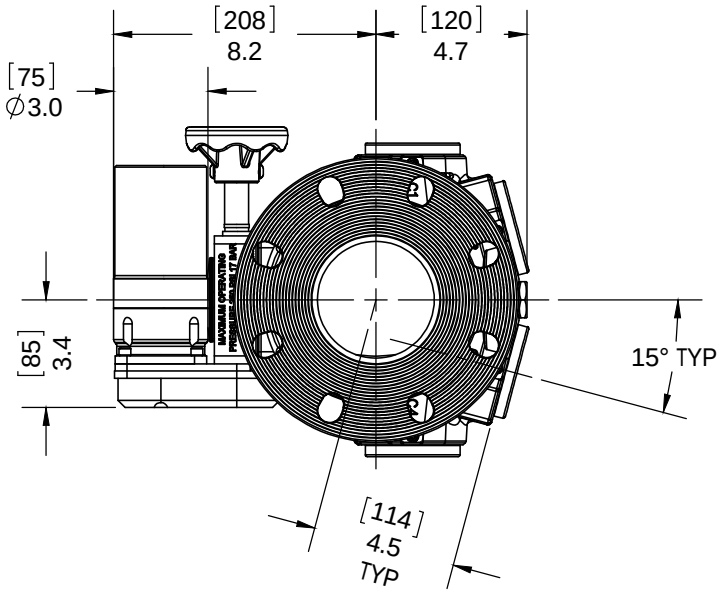

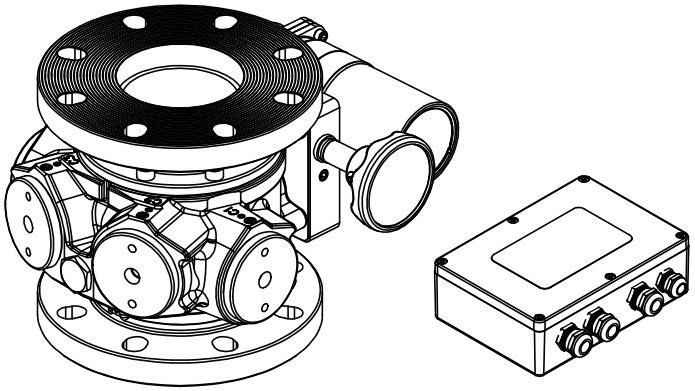

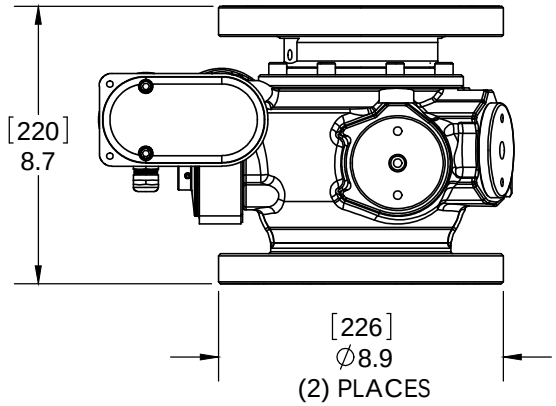

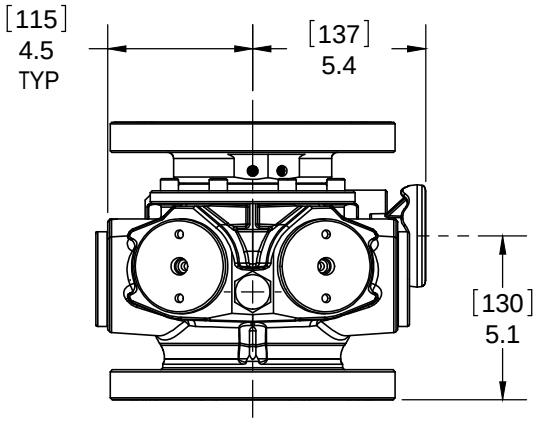

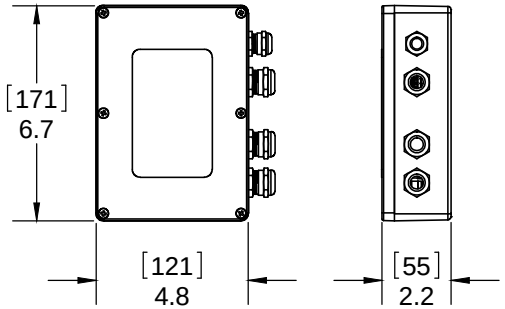

REMOTE INTERFACE BOX

WEIGHT: 31.3 LB

DIMENSIONS IN INCHES [mm]				
PRINT APPROVED		PRINT CHNG ENG		
12/22/10	MJGL			
SCALE: 1/6		REV	DATE	INIT
		PRINT DRAWN		
		10/29/09		MAS
		DESIGN ENGINEER		
		Alex C. Yovanovich		

TASK FORCE TIPS, INC.
3701 INNOVATION WAY
VALPARAISO, IN 46383 USA
(219)462-6161

TFT_APRLIST.SLDDRT

ITEM: AKE131111D	SHEET 1 of 1	DESCR: V.U.M. RC 4"ANSI X 4"ANSI W/DRAIN

EXTRA DESCR: C1,C2,C3,C4-BLIND_PLUGS